Examples of assemblies

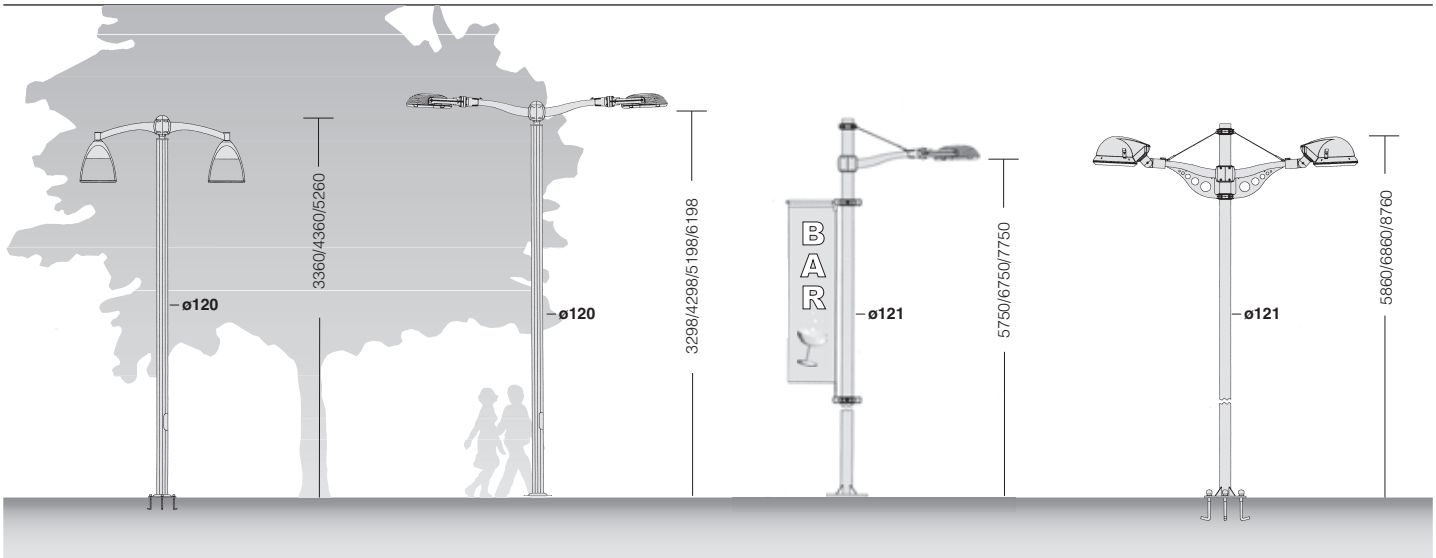

ES. ac 74 - 1 Metropolis	
Components:	
1 Metropolis	
1 pole to be selected between acc. 1491/93*	
1 Sector arm acc. 210	426950/51
1 Sector connect. acc. 211	426952/53
1 ring acc. 212	426954/55
1 attachment acc. 213	426956/57
1 tie-rod acc. 215	426960
*Pole height can be specified as desired	

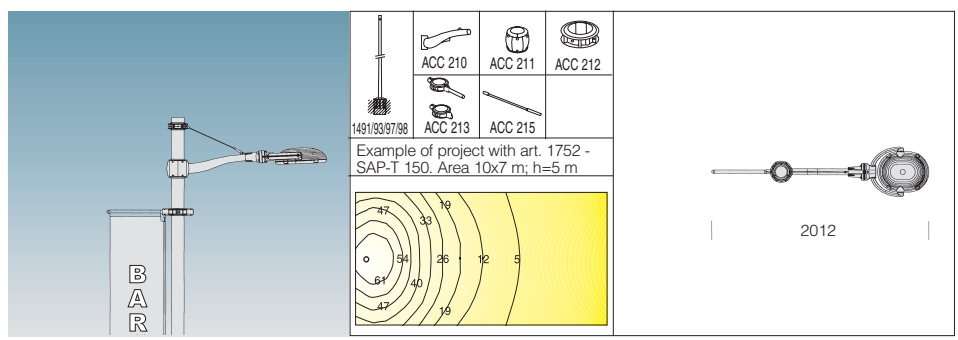

ES. b 30 - 2 Metropolis	
Components:	
2 Metropolis	
1 pole to be selected between acc. 1508/1509*	
1 Oliva acc. 300	426970/71
2 arms Sector acc. 210	426950/51
*Pole height can be specified as desired	

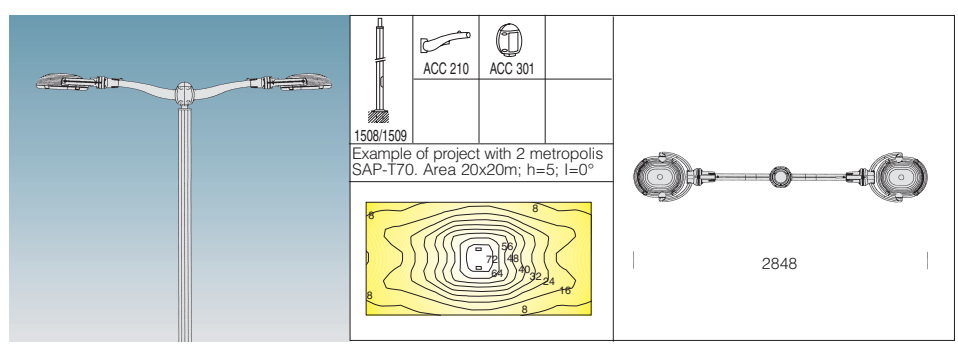

ES. b82 with scored pole ø120	
Components:	
2 Lanterna art. 1760/61/62/63/64/65	
1 pole to be selected between acc 1508 e 1509*	
1 Oliva acc. 300	426970/71
2 Oliva arms acc. 301	426972/73
2 attachments acc 309	426993
*Pole height can be specified as desired	

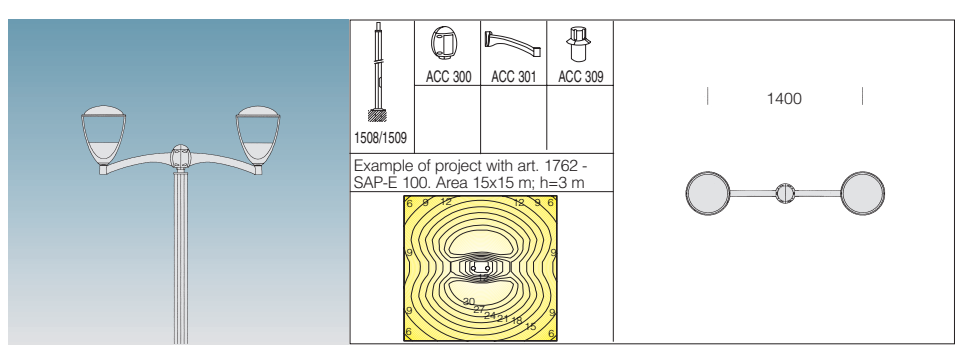

ES. ac95 - 2 Capri	
Components:	
2 Capri	
1 pole to be selected between acc.1491/93*	
2 Sector arm acc. 210	426950/51
1 Sector connect. acc. 211	426952/53
1 ring acc. 212	426954/55
2 attachment acc. 214	426958/59
2 tie-rods acc. 215	426960
2 pole attach. acc. 155	991362
*Pole height can be specified as desired	

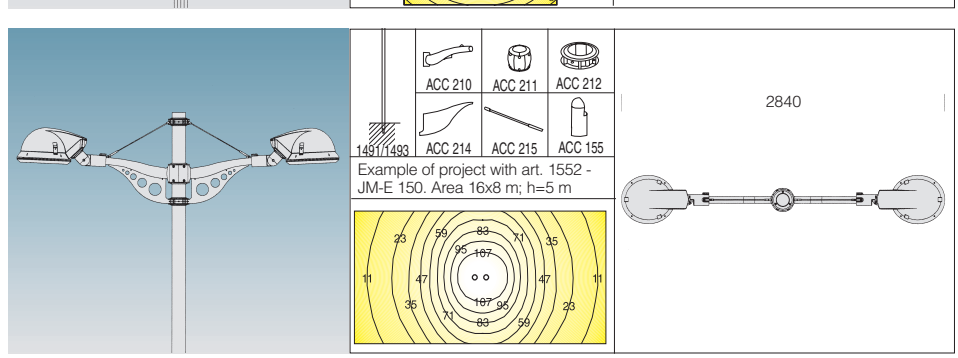

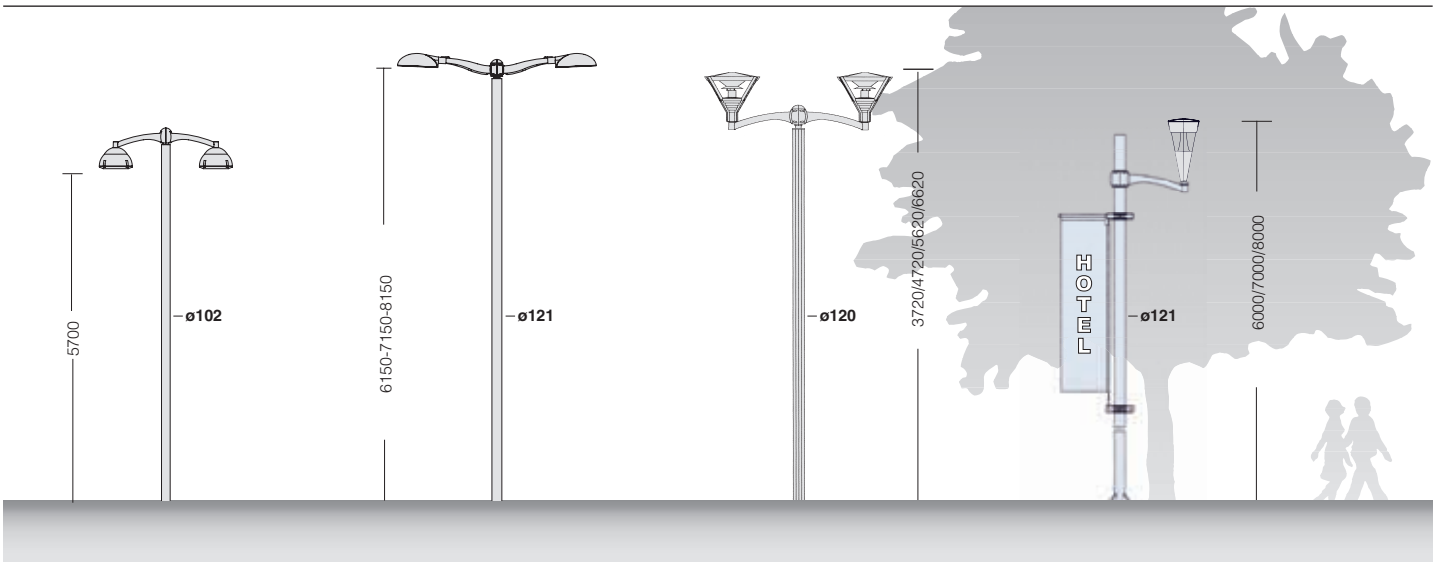

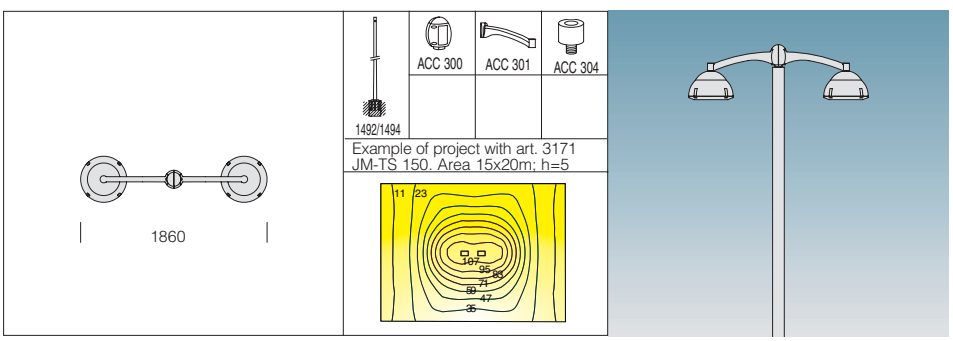

ES. ac 34 - Montecarlo	
Components:	
2 Montecarlo art. 3171/72/73	
1 pole to be selected between acc. 1492/94*	
1 Oliva acc. 300	426970/71
2 Oliva arms 301	426972/73
2 threaded connec. acc. 304	426978
*Pole height can be specified as desired	

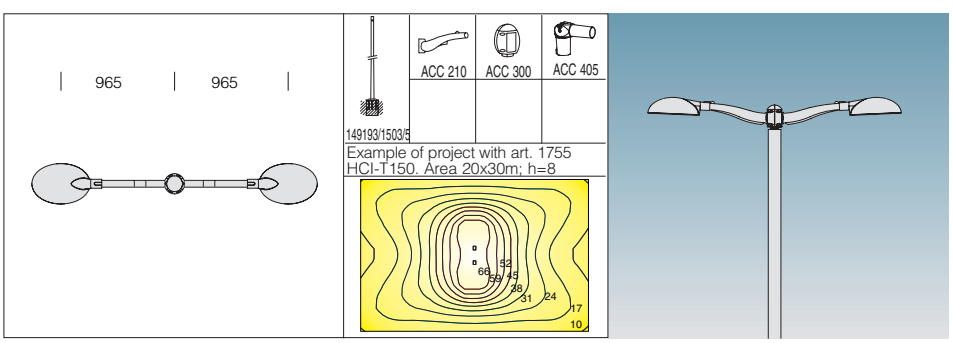

ES. b 28 - 1 Monza	
Components:	
2 Monza	
1 pole to be selected between acc. 1491/93/1503/05*	
1 Oliva acc. 300	426970/71
2 Sector arms acc.210	426950/51
2 connection acc. 405	991385/86
*Pole height can be specified as desired	

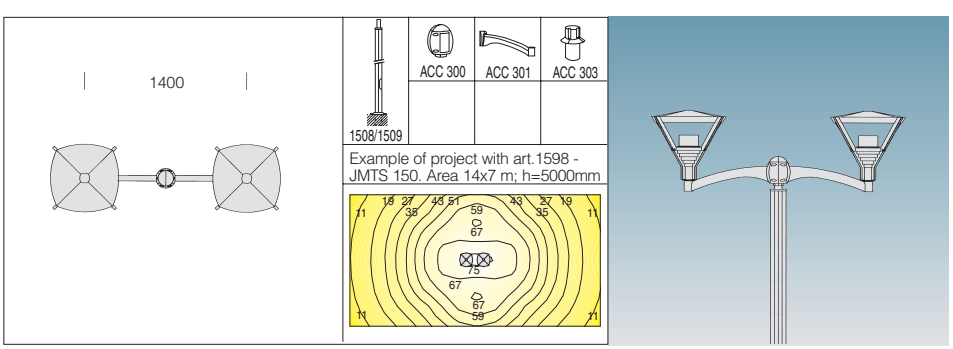

ES. b14 with pole Ø120 - 2 Vista	
Components:	
2 Vista art. (chose one from art. 1596/98/99)	
1 pole to be selected between acc. 1508 e 1509*	
1 Oliva acc. 301	426972/73
2 Oliva arms acc. 300	426970/71
2 attach. ø 60 acc. 303	426976/77
*Pole height can be specified as desired	

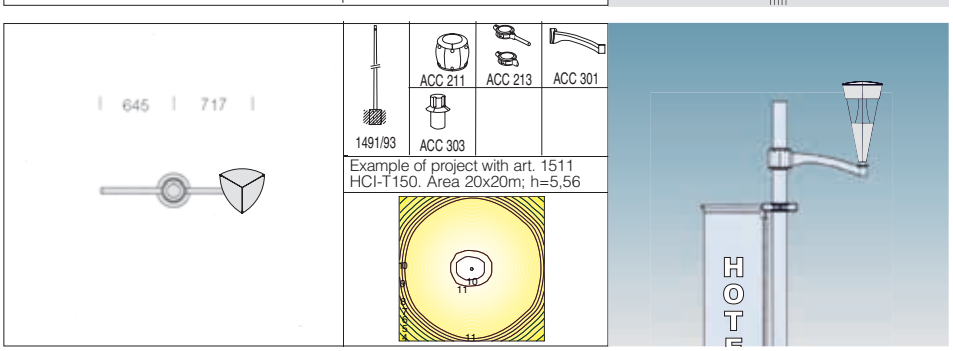

ES. b 28 - with steel pole ø120 - 1 Torcia	
Components:	
1 Torcia (choose three art.)	
1 pole to be selected between acc 1491 e 1493*	
1 attach. arm oliva acc. 301	426972/73
1 Sector connect. acc. 211	426952/53
1 banner connect. acc. 213	426956/57
1 attach. ø60 acc. 303	426976/77
*Pole height can be specified as desired	